Maximum Capacity:
75lbs.

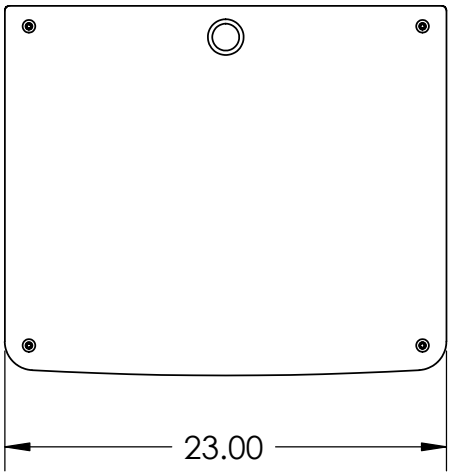

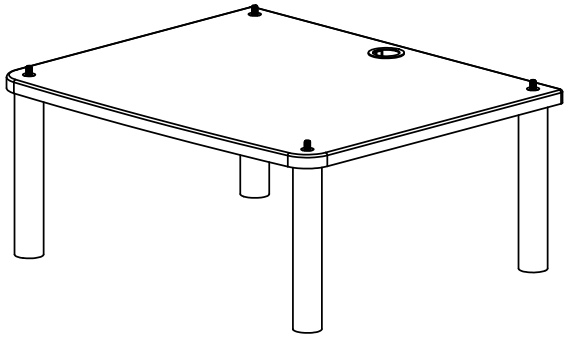

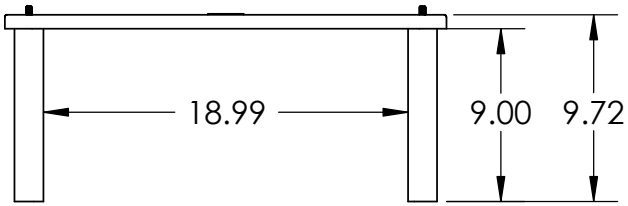

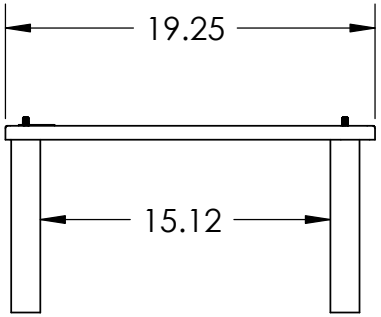

	NAME	DATE
DRAWN	NAS	9/27/05
CHECKED		
ENG APPR.		
MFG APPR.		
Q.A.		

SANUS SYSTEMS

TITLE:

AFSb

PROPRIETARY AND CONFIDENTIAL

THE INFORMATION CONTAINED IN THIS DRAWING IS THE SOLE PROPERTY OF SANUS SYSTEMS. ANY REPRODUCTION IN PART OR AS A WHOLE WITHOUT THE WRITTEN PERMISSION OF SANUS SYSTEMS IS PROHIBITED.

Accurate Furniture

SCALE: 1:10

SHEET 1 OF 1

5 4 3 2 1