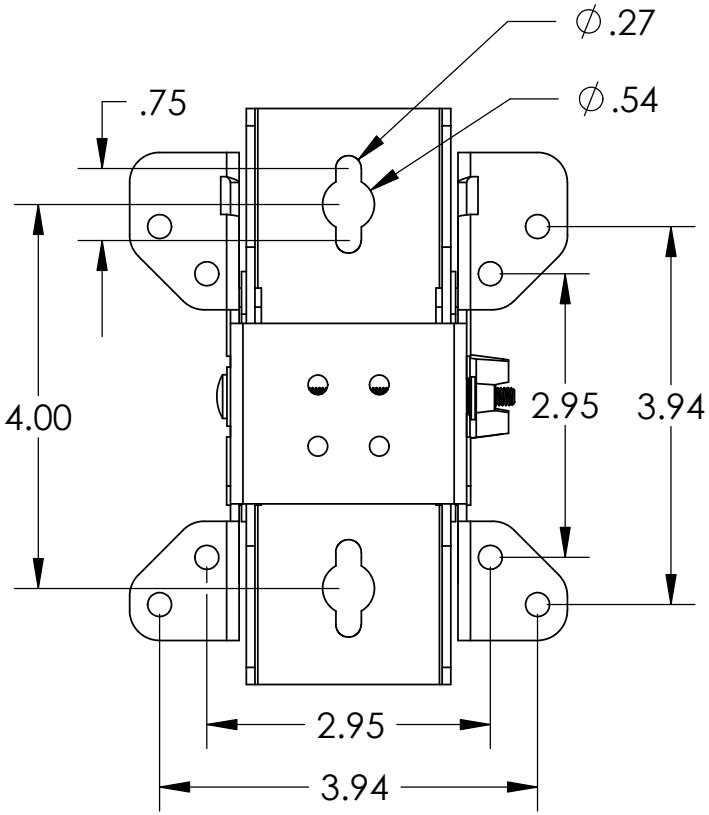

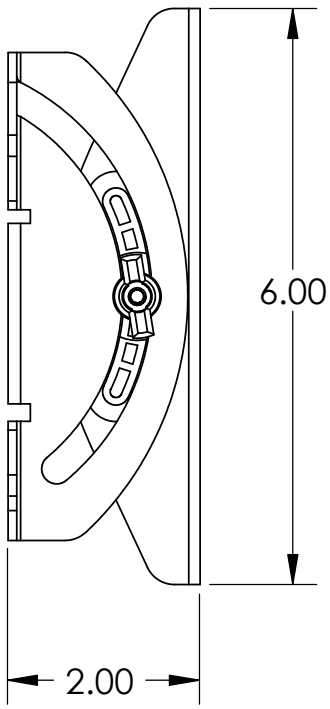

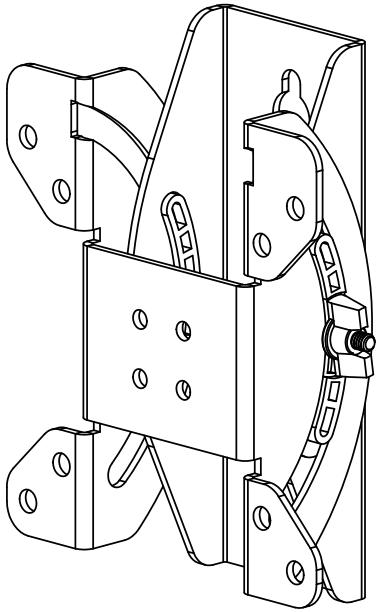

Maximum Weight Capacity: 50 lbs.

Mounting Pattern VESA 75 & 100

	NAME	DATE
DRAWN	NAS	11/14/05
CHECKED		
ENG APPR.		
MFG APPR.		
Q.A.		

PROPRIETARY AND CONFIDENTIAL

THE INFORMATION CONTAINED IN THIS DRAWING IS THE SOLE PROPERTY OF SANUS SYSTEMS. ANY REPRODUCTION IN PART OR AS A WHOLE WITHOUT THE WRITTEN PERMISSION OF SANUS SYSTEMS IS PROHIBITED.

Tilt Wall Mount

SANUS SYSTEMS

TITLE:

VMF

SCALE: 1:2

SHEET 1 OF 1

5 4 3 2 1