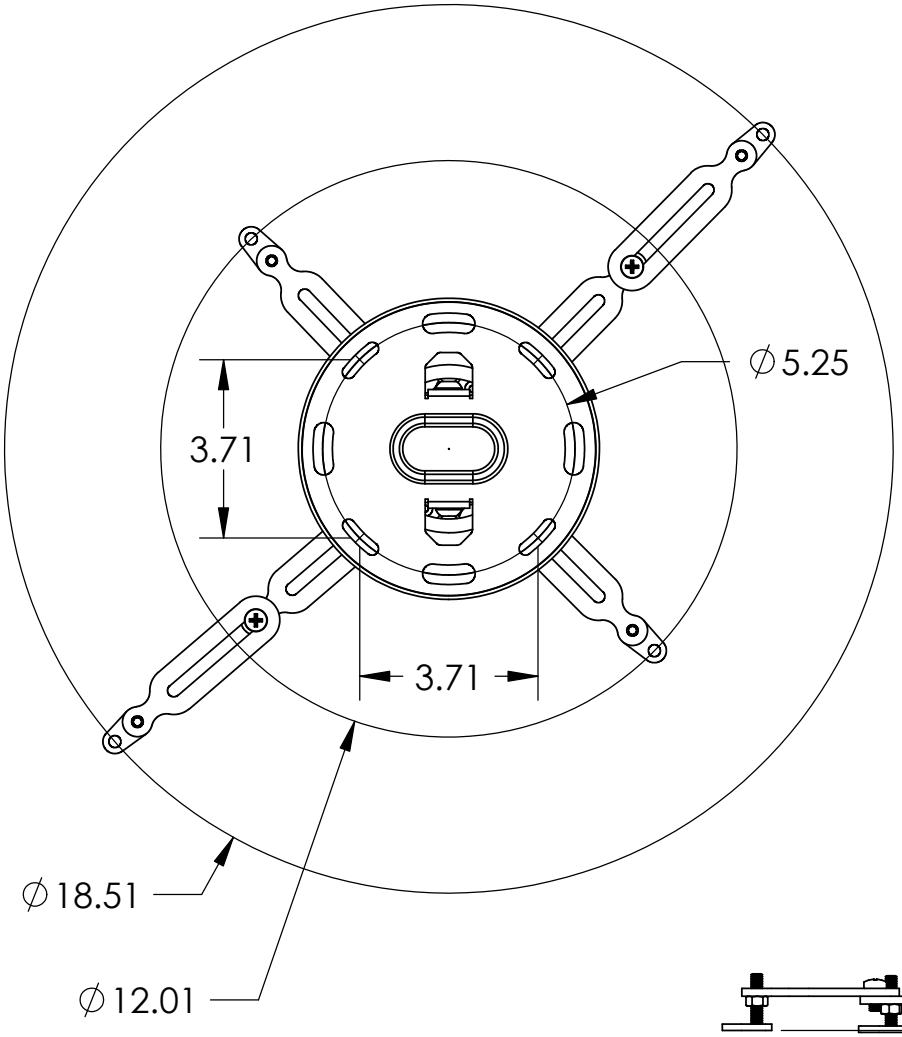


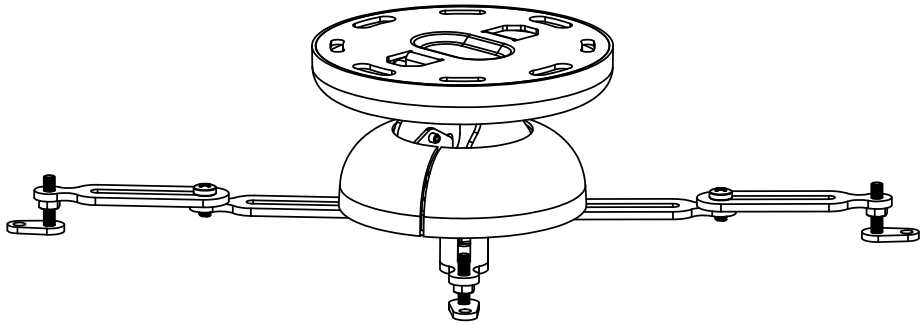

Attaches to existing 1" NPT pipe
for drop down applications.

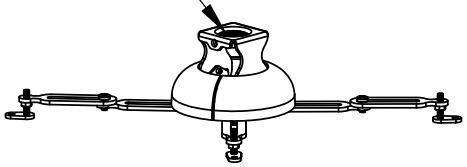

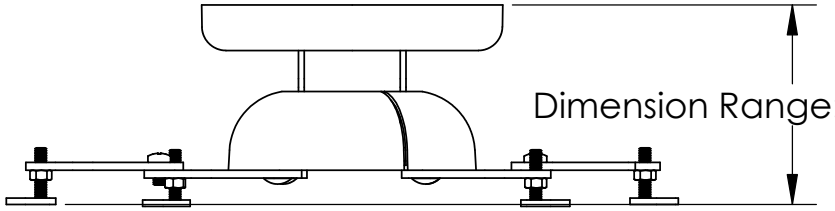


Maximum Weight
Capacity: 50 lbs.

| | NAME | DATE |
|---|---|---|
| DRAWN | NAS | 11/14/05 |
| CHECKED | | |
| ENG APPR. | | |
| MFG APPR. | | |
| Q.A. | | |

SANUS SYSTEMS

TITLE:

VMPR1

**PROPRIETARY AND CONFIDENTIAL**
THE INFORMATION CONTAINED IN THIS DRAWING IS THE SOLE PROPERTY OF SANUS SYSTEMS. ANY REPRODUCTION IN PART OR AS A WHOLE WITHOUT THE WRITTEN PERMISSION OF SANUS SYSTEMS IS PROHIBITED.

Tilt & Swivel
Ceiling Mount for
TV Projectors

SCALE: 1:4

SHEET 1 OF 1

5 4 3 2 1