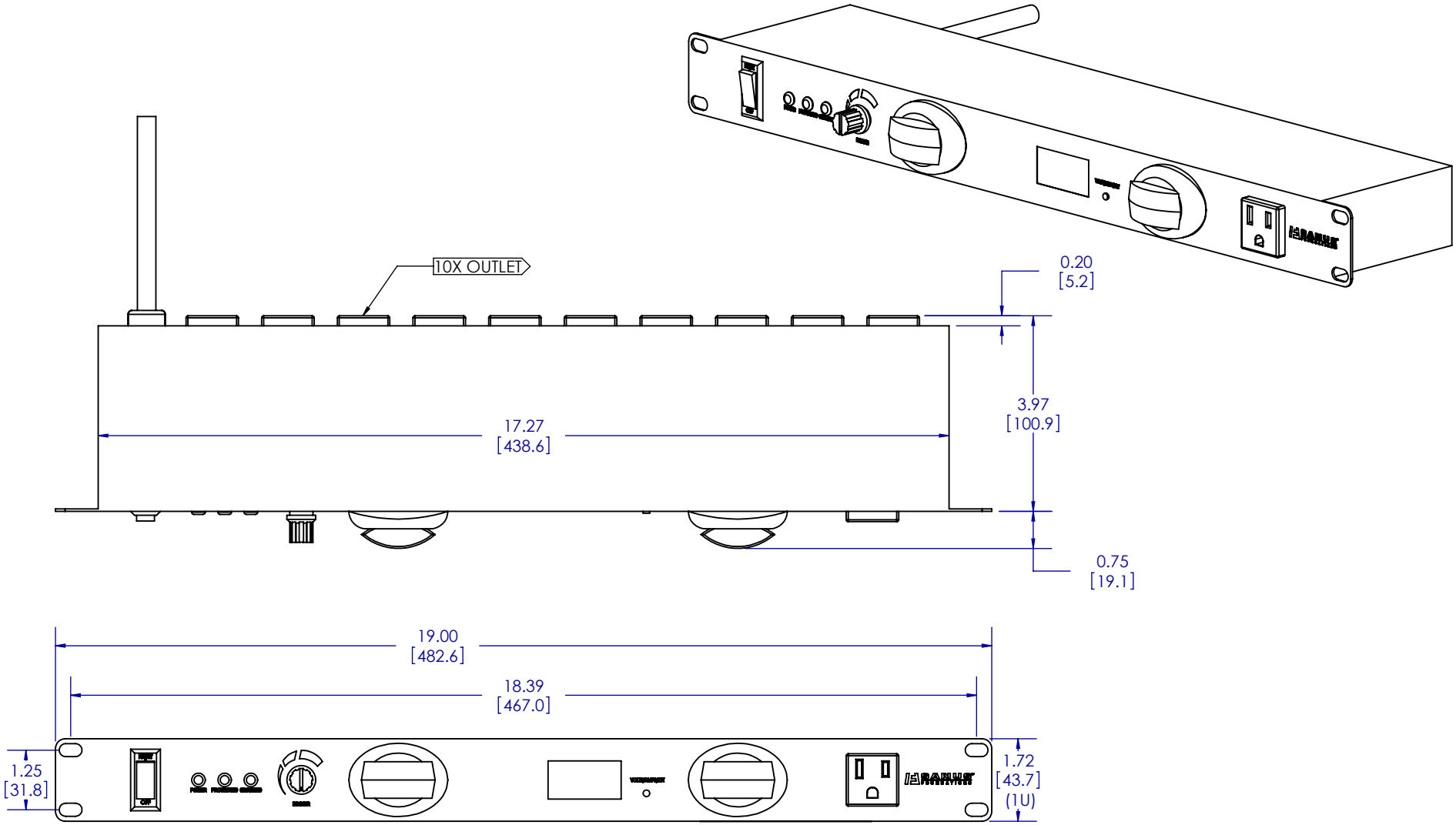

PROPRIETARY AND CONFIDENTIAL

THE INFORMATION CONTAINED IN THIS DRAWING IS THE SOLE PROPERTY OF SANUS SYSTEMS, A PRODUCT DIVISION OF MILESTONE AV TECHNOLOGIES. ANY REPRODUCTION IN PART OR AS A WHOLE WITHOUT THE WRITTEN PERMISSION OF SANUS SYSTEMS IS PROHIBITED.

专 有 且 机 密 资 料

本信息属*SANUS SYSTEMS*公司专属财产，非经*SANUS SYSTEMS*书面许可，严禁复制其中任任何内容

	NAME 姓 名	DATE 日 期
ENGINEER工 程 师	JKV	3/11/2010
DESIGNER设 计 师	JKV	3/11/2010
APPROVED批 准	MJT	3/11/2010

NOTES注 释 :

TEMPLATE REV 模 板 修 订 版 : 06 | SCALE 比 例 1:3 | SHEET 1 OF第 1

SANUS™ FOUNDATIONS

DESCRIPTION 描 述 :

CAPC01

5 4 3 2 1