Top Shelf Capacity
275lbs.
Mid Shelf Capacity
175lbs.

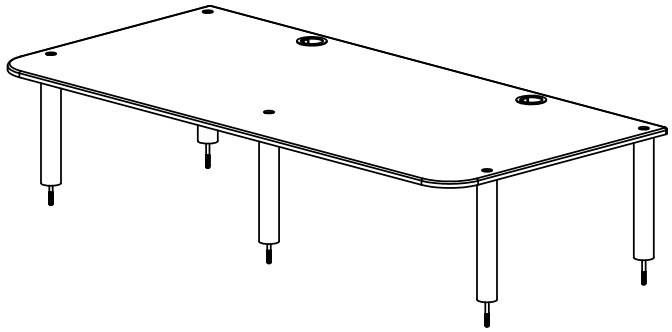

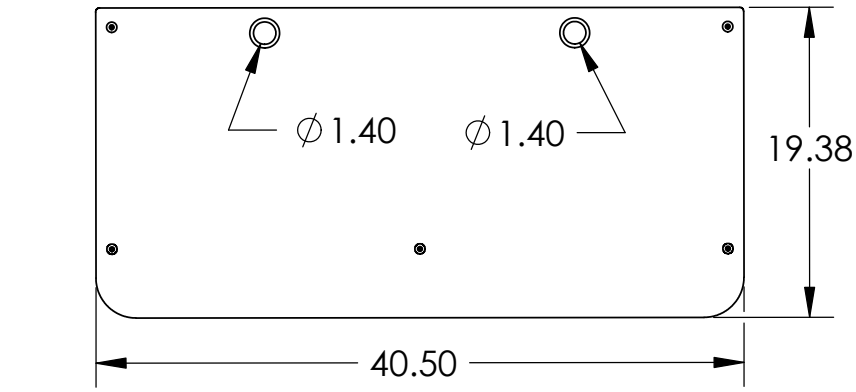

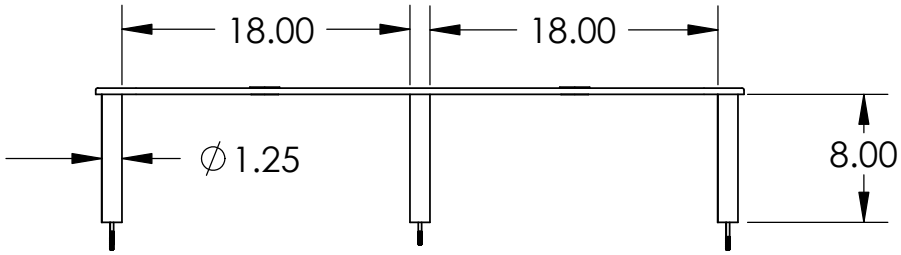

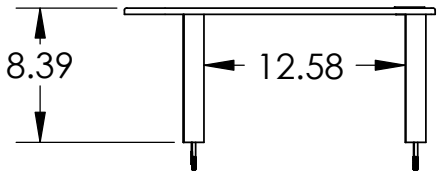

Accessories	Description
EFP5	5" High Pillars
EFP12	12" High Pillars

	NAME	DATE
DRAWN	NAS	10/11/05
CHECKED		
ENG APPR.		
MFG APPR.		
Q.A.		

SANUS SYSTEMS

TITLE:

EFVSII

PROPRIETARY AND CONFIDENTIAL

THE INFORMATION CONTAINED IN THIS DRAWING IS THE SOLE PROPERTY OF SANUS SYSTEMS. ANY REPRODUCTION IN PART OR AS A WHOLE WITHOUT THE WRITTEN PERMISSION OF SANUS SYSTEMS IS PROHIBITED.

Euro Furniture

SCALE: 1:12

SHEET 1 OF 1

5 4 3 2 1