Maximum Weight
Capacity: 130 lbs.

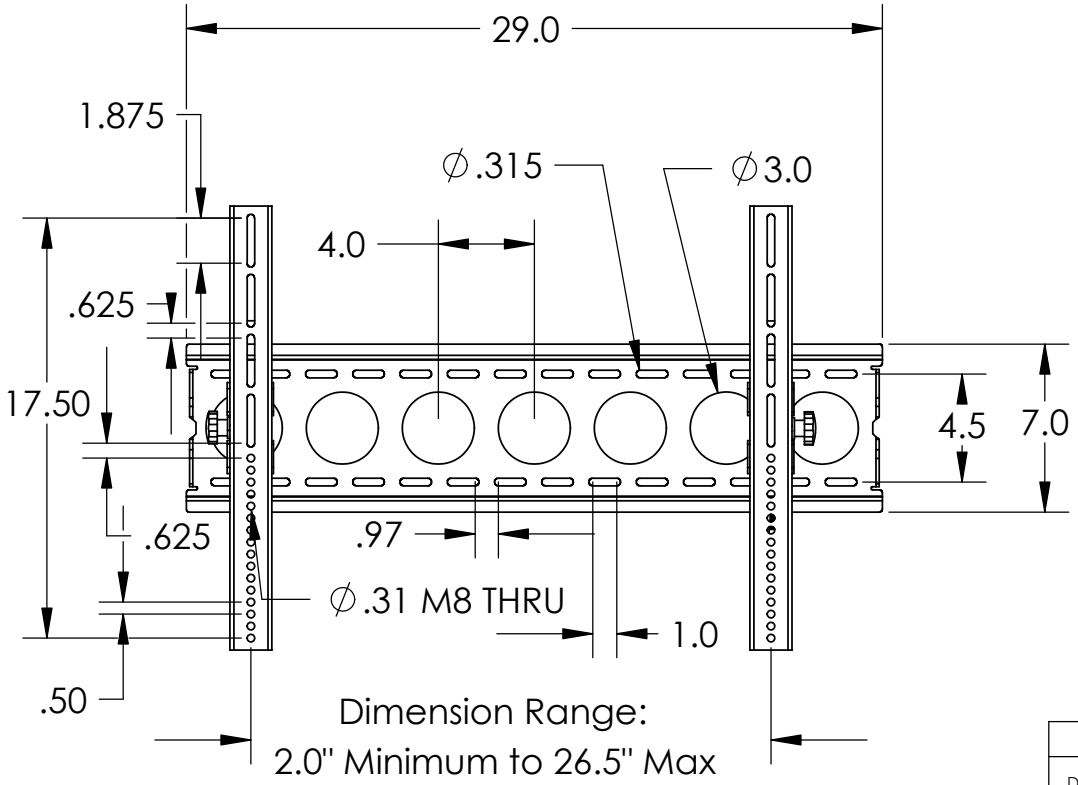

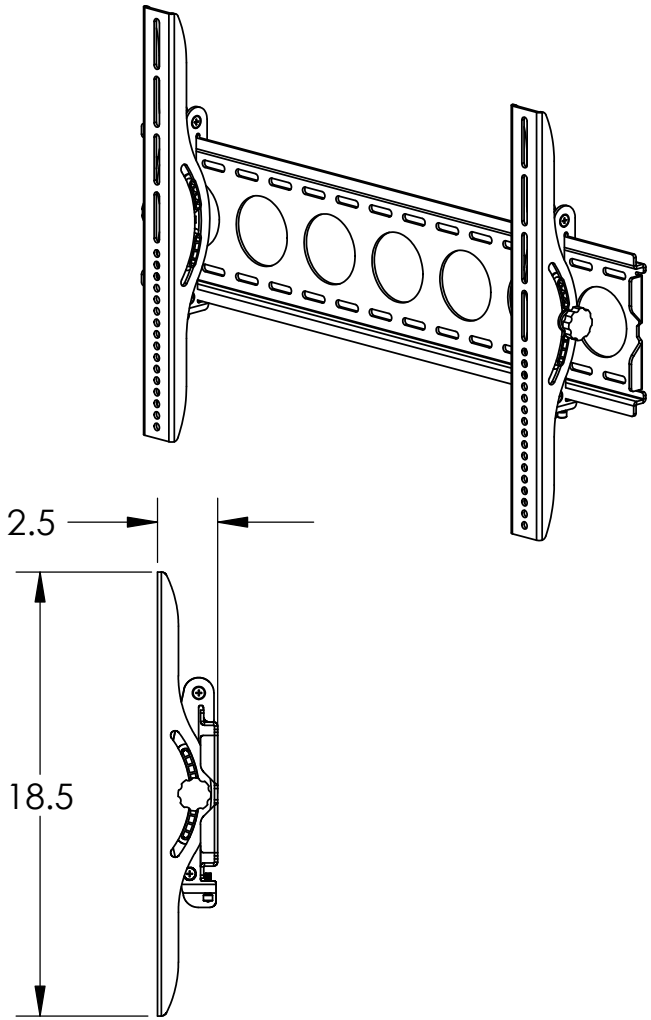

	NAME	DATE
DRAWN	NAS	11/14/05
CHECKED		
ENG APPR.		
MFG APPR.		
Q.A.		

SANUS SYSTEMS

TITLE:

VMPL50

PROPRIETARY AND CONFIDENTIAL
THE INFORMATION CONTAINED IN THIS DRAWING IS THE SOLE PROPERTY OF SANUS SYSTEMS. ANY REPRODUCTION IN PART OR AS A WHOLE WITHOUT THE WRITTEN PERMISSION OF SANUS SYSTEMS IS PROHIBITED.

Tilt
Wall Mount

SCALE: 1:3

SHEET 1 OF 1

5 4 3 2 1