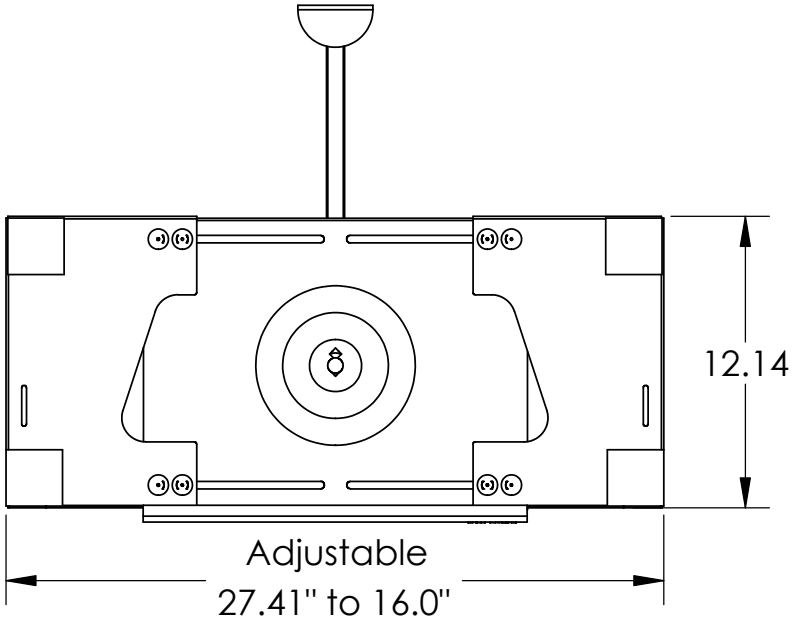


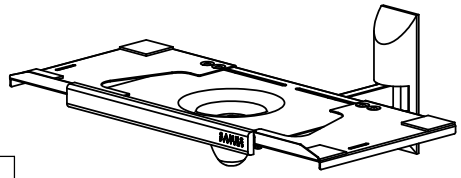

Available in Black and Silver.

Maximum Weight Capacity: 100lbs.

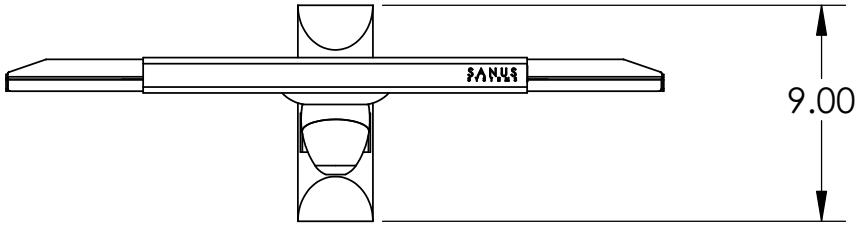


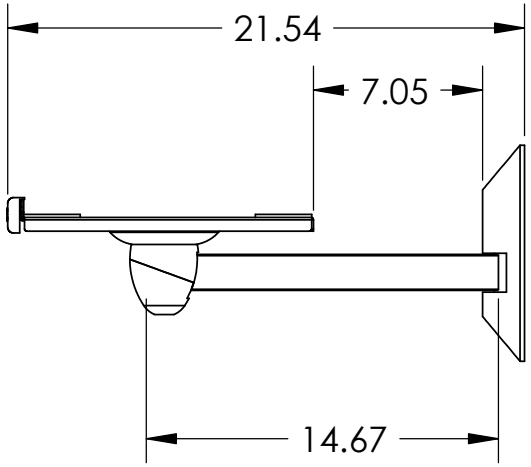


| | NAME | DATE |
|---|---|---|
| DRAWN | NAS | 10/25/05 |
| CHECKED | | |
| ENG APPR. | | |
| MFG APPR. | | |
| Q.A. | | |

SANUS SYSTEMS

TITLE:

VMTV

**PROPRIETARY AND CONFIDENTIAL**

THE INFORMATION CONTAINED IN THIS DRAWING IS THE SOLE PROPERTY OF SANUS SYSTEMS. ANY REPRODUCTION IN PART OR AS A WHOLE WITHOUT THE WRITTEN PERMISSION OF SANUS SYSTEMS IS PROHIBITED.

Vision Mount

SCALE: 1:8

SHEET 1 OF 1

5 4 3 2 1